HOLY STONE

14+ age

Instructions For Use
Gebrauchsanweisung

V 2.0

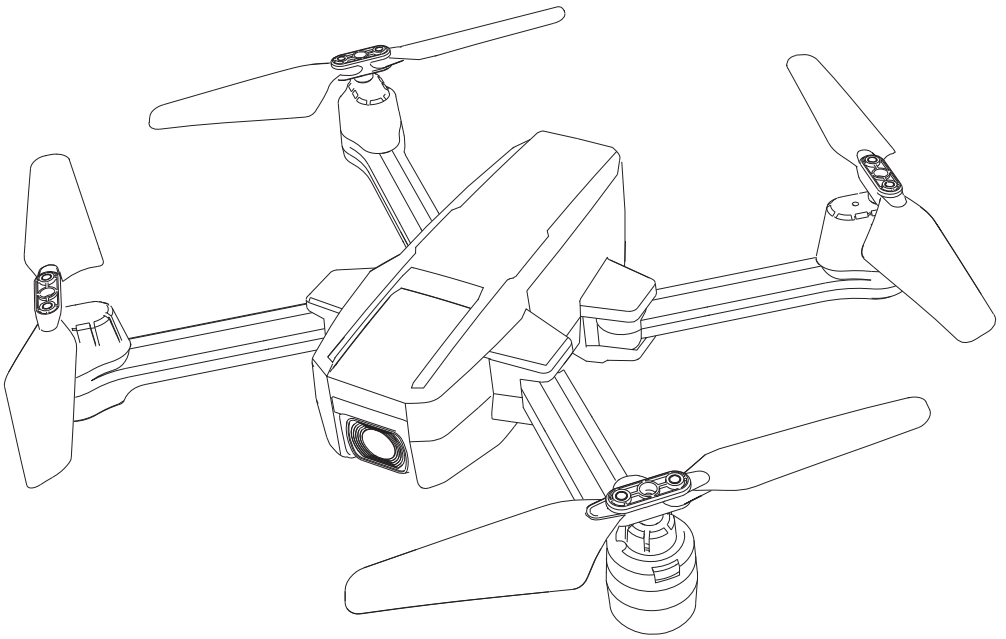

HS440D

+1(833)766-4733

www.holystone.com

usa@holystone.com (USA)
ca@holystone.com (CA)

eu@holystone.com (EU)
au@holystone.com(AU)

English 01-44

Deutsch 45-86

Contents

Disclaimer & Warning 01
Safety Guidelines 01
Maintenance 05
Package Contents 06
Diagram of Drone 07
Diagram of Transmitter 08
Joystick Mode 10
Preparation Before Flight
- Charging Drone Battery 11
- Install Transmitter Batteries 12
- App Download and Installation 13
- Drone Arms 13
- Drone Battery 14
- Propellers 15
- TF Card 16
- Phone Holder 16

Flight
- Pairing 17
- Connecting to Drone's Wi-Fi 18
- Compass Calibration 19
- GPS Signal Search 20
- Gyro Calibration 21
- Unlocking the Motors 21
- Takeoff/Landing 22

Return To Home 23
Trimmer 26
Altitude-Hold 27

App Operation Instruction
The Interface 28
Beginner Mode 30
Follow Me 31
Orbit Flight 32
Headless Mode 33
Photo/Video 34
TapFly 35
Specifications..... 36
Contact Us 38
General Information 39

DISCLAIMER & WARNING

1. Please read this Disclaimer & Warning and Safety Guidelines carefully before using our product. This product is not recommended for people under the age of 14. By using this product, you hereby agree to this disclaimer and signify that you have read it fully. You agree that you are responsible for your own conduct and any damage caused while using this product, and any consequence. You agree to only use this product for its designed purposes and in accordance with the local laws, regulations and all applicable policies and guidelines that HolyStone may provide.
2. When using this product, please be sure to strictly abide by the specification requirements and safety guidelines stated in this document. Any personal injury, property damage, legal disputes and all other adverse events caused by the violation of any of the safety instructions or due to any other factor, WILL NOT be HolyStone's responsibility.

SAFETY GUIDELINES

Check Before Use

① This product is a high precision drone that integrates various electronic stability and control mechanisms. Please be sure to configure this drone carefully and correctly to ensure safe, accident-free operation.
② Ensure that the batteries of the drone and transmitter are clean, undamaged and fully charged before every use.
③ Ensure that all the propellers are undamaged and are installed in the correct orientation.

SAFETY GUIDELINES

④ Please perform a thorough check of the product before each use. Inspect the integrity of the parts, any signs of cracks and wear off on the propellers, battery power and effectiveness of the indicator, etc. If there is any problem found after checking the drone, please refrain from using it until the problem is resolved.

Flight Environment

Fly in Open Areas + **Keep in Sight** + **Fly Below 390 ft (120 m)**

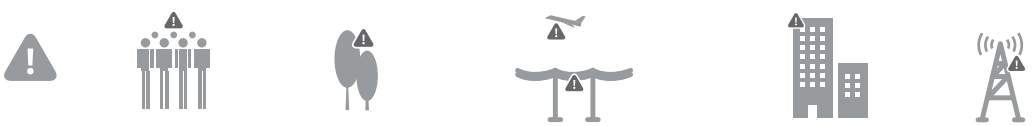

Avoid flying over, or near obstacles, crowds, high voltage power lines, trees, airports or bodies of water.
DO NOT fly near strong electromagnetic sources such as power lines and base stations as it may affect the onboard compass.

DO NOT use this drone in adverse weather conditions such as rain, snow, fog, and wind.

SAFETY GUIDELINES

Operation Requirements

① DO NOT use this product to follow any moving vehicles.

② During the flight, turn off the motors only in case of an emergency.

③ When the battery runs low, return the drone back to your starting point.

④ DO NOT use this product if you feel tired, take medicine or feel unwell and drink alcohol.

⑤ Be aware of the volume of noise that the drone produces. Please ensure to keep your distance to avoid ear damage.

⑥ To ensure safety and airworthiness, refrain from attaching any unauthorized items or devices to the aircraft.

⑦ **Stay away from the rotating propellers and motors.**

⑧ **DO NOT fly in any spaces where drones are prohibited. Please respect people's right to privacy by not flying your drone close to others.**

Use of Battery

① Please ensure batteries are fitted in the correct orientation as shown in the instruction manual.

② Avoid short circuits by fitting the batteries correctly, and do not crush or squeeze the batteries as this could cause the risk of a fire or explosion.

③ DO NOT mix new and old batteries as this can lead to poor performance of the product.

④ Please dispose of used batteries carefully, do not litter and recycle where ever possible.

⑤ DO NOT expose dead batteries to heat or fire or they may explode.

⑥ If the device is not going to be used for an extended period of time, please remove batteries to prevent potential damage to the drone from battery leakage.

SAFETY GUIDELINES

⑦ Only use the USB charging cable that comes with the drone to charge the battery.

⑧ DO NOT connect the battery directly to wall outlets or car cigarette -lighter sockets as this will damage your battery since they have different voltages.

⑨ DO NOT attempt to disassemble or modify the battery in any way

⑩ DO NOT use the battery if it gives off an odor, generates heat, becomes discolored, deformed or appears abnormal in any way. If any of these situations occur while the battery is in use or being charged, remove it from the device or charger immediately and discontinue use.

⑪ DO NOT pierce the battery casing with a nail or any other sharp object, break it open with a hammer, or step on it! Dispose or recycle this battery as it may cause personal injury or damage to your drone.

⑫ Always charge the batteries on a fireproof surface and away from combustible materials. DO NOT charge on surfaces that can catch fire, which includes: wood, cloth, carpet.

⑬ DO NOT immerse the battery in water or get it wet.

⑭ DO NOT solder battery terminal in any way.

⑮ Keep batteries out of reach of children or pets.

⑯ DO NOT short-circuit the battery by connecting wires or any other metal object to the positive(+) and negative(-) terminals.

⑰ It is imperative to use only the batteries and charging devices sold or authorized by our company. Employing unauthorized batteries or charging apparatuses may result in serious hazards such as fire, explosion, leakage, among others. We will not be held accountable for any repercussions arising from the utilization of third-party batteries or charging devices.

Li-Po Battery Disposal & Recycling

Waste Lithium-polymer batteries must not be placed with household trash. Please contact local environmental or waste agency or the waste agency or the supplier of your model or your nearest Li-Po battery recycling center.

MAINTENANCE

① Clean the drone after each use with a clean, soft cloth.

② Avoid prolonged exposure to direct sunlight and avoid buildup of heat on the drone or batteries.

③ This device is not waterproof and must not be submerged or subjected to water under any circumstance. Failure to keep the device completely dry will result in failure and permanent damage to the unit. Be aware that although it might be dry where you are, droplets of rain or mist from a river or waterfall could damage your drone where it is flying.

④ Frequently check the charging plug and other accessories for signs of damage. If any part of the device or cables are damaged, avoid use or charging until the damaged parts are replaced.

⑤ Post-Flight

- Observe the drone for any damage from a potential collision or crash.
- Check to be sure all moving parts including the propellers are secure.
- Check the battery for signs of overheating, warping or swelling. If you notice any abnormality in the battery such as decoloring, remove it immediately from the drone.
- Check the levels and efficiency of the power of the battery.
- Clean all lights and be sure they are all functioning properly for the next flight.

PACKAGE CONTENTS

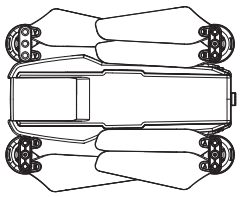	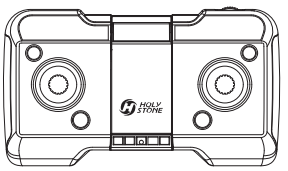	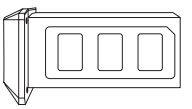
Drone	Transmitter	Drone Battery
		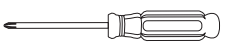
Propeller	USB Charging Cable	Screwdriver
Instructions For Use		

DIAGRAM OF DRONE

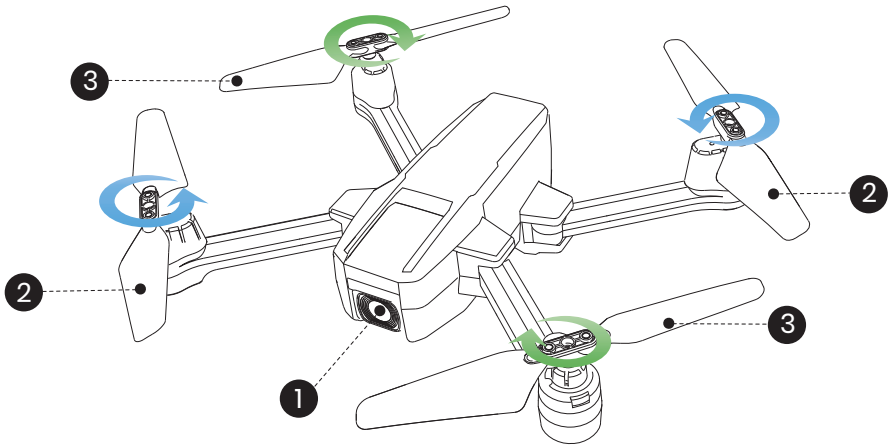

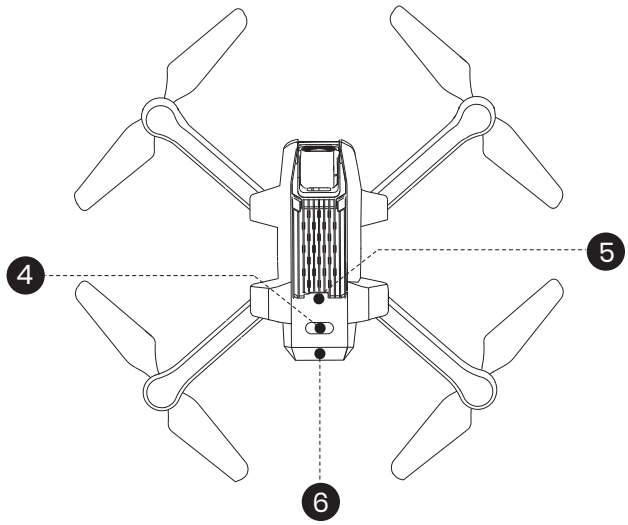

1. Camera
2. Propeller B
3. Propeller A
4. Power Switch/ Drone Status LED
5. TF Card Slot
6. Drone Battery

Power on/off: Long press the power button "⏻" to turn on the drone. Long press again to turn it off.

DIAGRAM OF TRANSMITTER

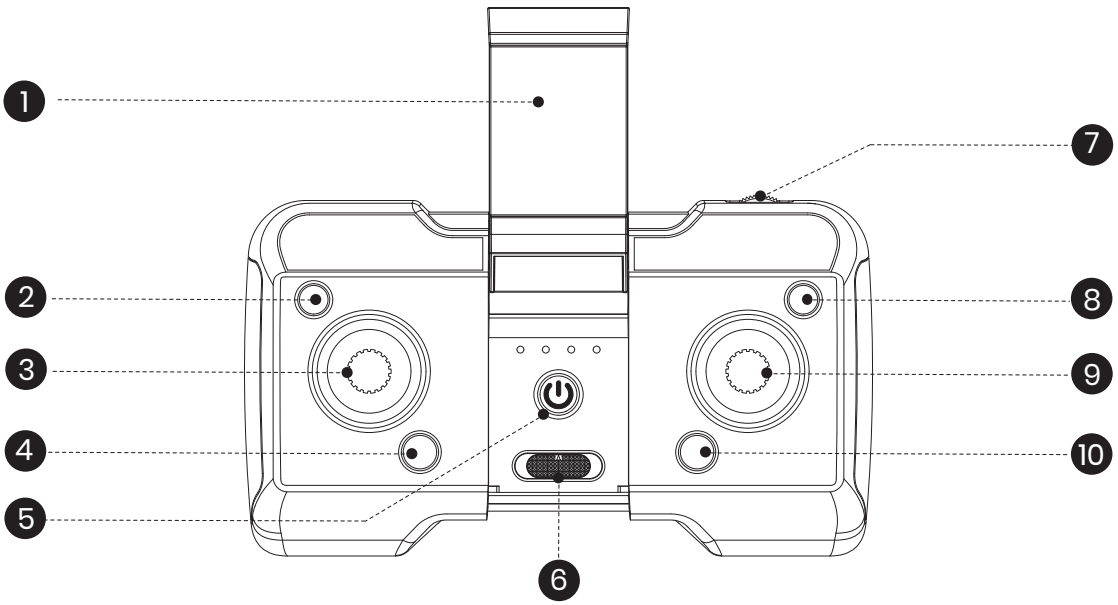

1 Phone Holder

2 **Short Press**-Take Photo
Long Press-Record Video

3 Left Joystick

4 **Short Press**-Takeoff/Landing
Long Press-Trimmer

5 Power Switch

6 Speed Switch

7 Camera Angle Adjustment

8 **Short Press**-Return to Home
Long Press-GPS Switch

9 Right Joystick

10 **Short Press**-Unlock/Lock
Long Press-Emergency Stop

Power on/off: Short press the power switch "⏻" to turn on the transmitter. Long press the power switch to turn off.

- **Take Photo/Record Video**

Short press the " " button on the transmitter. The drone status LED flashes once, and the transmitter beeps once. The camera has taken a photo.

Long press the " " button. The drone status LED begins to flash slowly, which means that the camera is recording. Long press the button again will stop video recording.

DIAGRAM OF TRANSMITTER

- **Speed Switch**

This drone comes with two speed levels (high/low). Slide the " Low/High " to switch between the two speed levels.
When pushing, the transmitter will beep once to indicate low speed, twice to indicate high speed.

- **Adjustment of the Camera Angles**

You can adjust the camera's angle by turning the wheel on the upper right corner of the transmitter.
Scroll the wheel to the left, and the camera tilts up. Scroll it to the right, and the camera swings down. (The tilt range is -90° to 0°)

- **Turning On/Off the GPS Mode**

The drone will be in GPS mode by default every time you power on the transmitter. To turn off the GPS mode, long press the " " button on the transmitter. The drone status LED will turn solid yellow, and the transmitter will long beep once.

- **Return to Home (RTH)**

Short press the RTH button " " to start the RTH, the transmitter makes a beep sound and the drone will fly back to the recorded Home Point.
Short press the RTH button " " again to exit the RTH procedure and regain control of the drone.

- **Emergency Stop**

Long press the " " button for about 2 seconds. All the motors stop spinning immediately, and the drone falls to the ground.

⚠ The Emergency Stop function should only be used in case of emergency during the flight to avoid any damage or injury.

JOYSTICK MODE

MODE 2 (Left joystick as the throttle joystick)

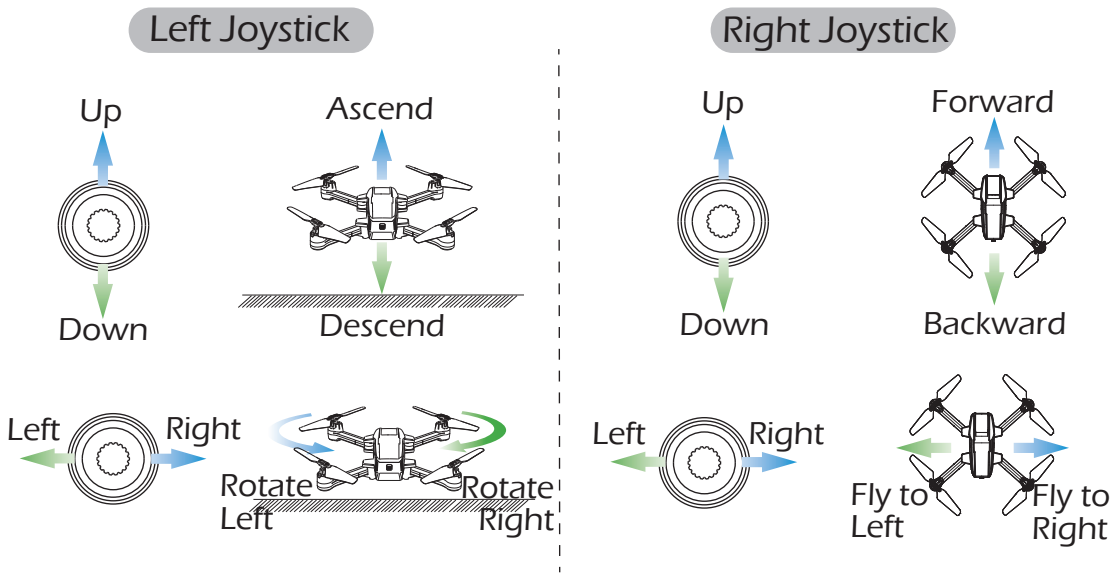

MODE 1

To enter MODE 1, turn on the transmitter while holding the " ⬍ " button. (Please do not release the " ⬍ " button until the transmitter is powered on.)

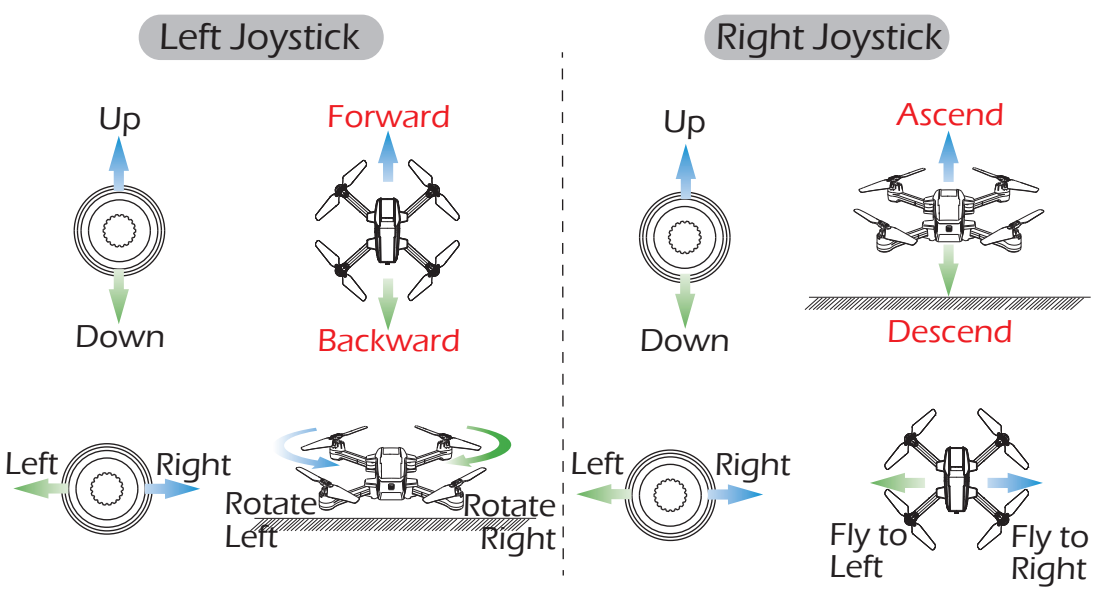

⚠ Mode switching is only possible before pairing.

PREPARATION BEFORE FLIGHT

Charging Drone Battery

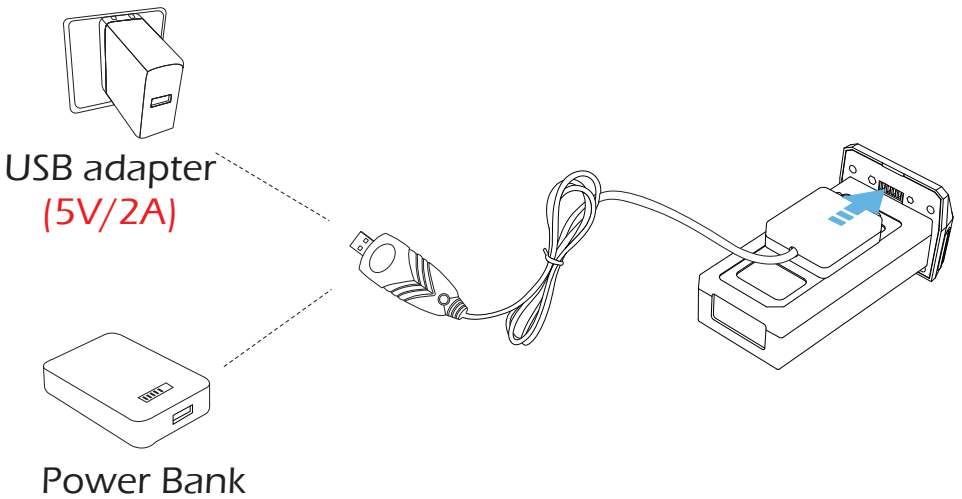

① Connect the drone battery to the charging cable.

② Plug the charging cable into a USB adapter (5V/2A) or a power bank to charge the drone battery.

③ During charging, one indicator on the cable is solid red, the other flashes green.

When fully charged, both of the indicators (red and green) are solid.

④ Charging time: about 120 minutes.

⚠

- Before charging, please read the instructions in the "Use of Battery" section of the "Safety Guidelines" carefully!
- Don't charge the drone battery immediately after a flight, for the temperature of the battery may be too high. Please wait till it cools down to charge it again.

PREPARATION BEFORE FLIGHT

Install Transmitter Batteries

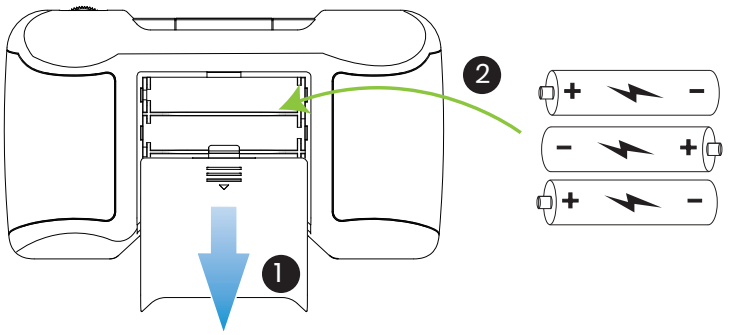

Slide the battery cover out, insert three AAA batteries **(not included)** into the battery compartment. Then slide the battery cover back to complete the installation.

- When inserting or changing the batteries, please pay attention to the correct polarities!
- Do not mix old and new batteries, or different types of batteries.
- Exhausted batteries should be removed immediately and disposed of properly, either in a battery collection receptacle or to the appropriate authority.

PREPARATION BEFORE FLIGHT

App Download and Installation

iOS

Android APP on Google play

Scan the QR code, connect to the App Store™ or Google™ Play and download the **HolyStone-FPV** application for free.
Required Operating Systems: iOS 9.0 or later/Android 5.0 or later.

Drone Arms

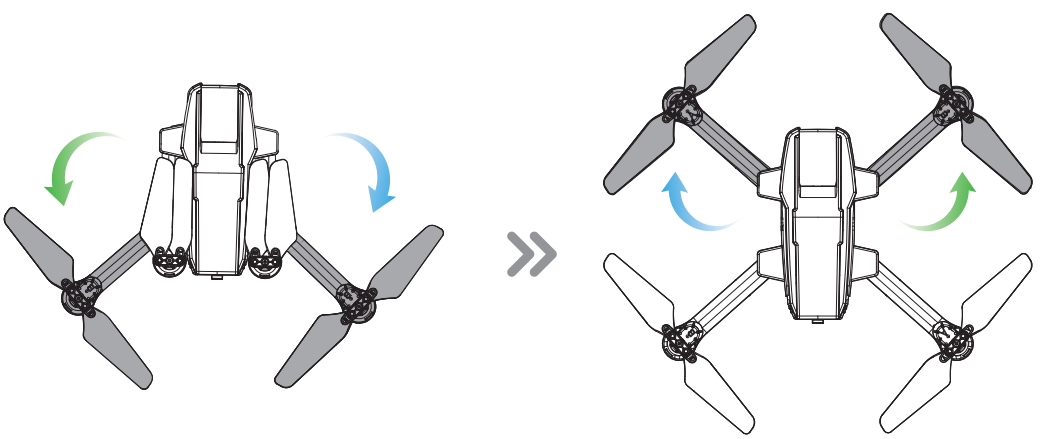

First unfold the rear drone arms, then unfold the front drone arms.

PREPARATION BEFORE FLIGHT

Drone Battery

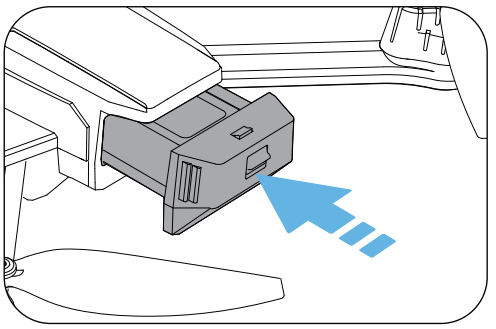

Installation: Push the battery into the battery compartment at the rear of the drone. Make sure that you hear a click sound, which indicates that the battery is firmly installed.

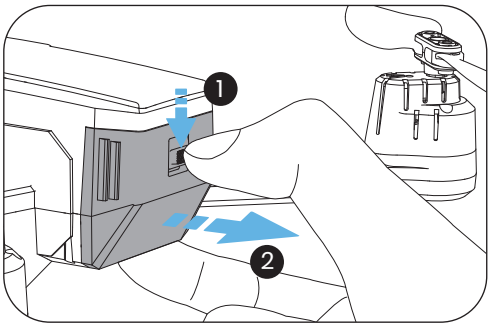

Remove: Press the lock button on the battery and pull it back to remove the battery from the battery compartment.

The battery should be installed firmly. Otherwise, the flight safety of your drone may be affected. The drone may crash due to a power-cut during the flight.

PREPARATION BEFORE FLIGHT

Propellers

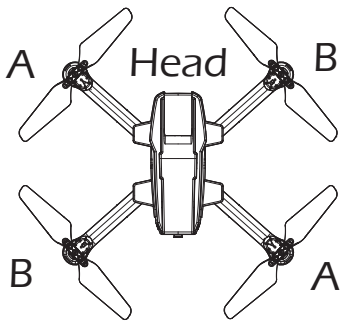

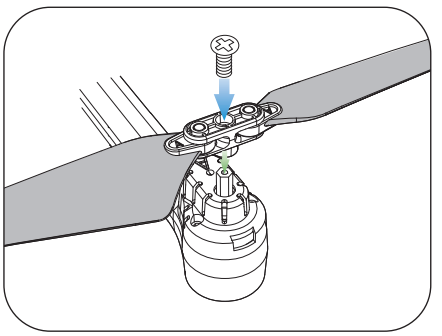

Installation:

① An "A" or "B" is printed on the propeller.

② Lock the propellers to the corresponding the arms of drone (the motor shafts are also marked) with screws.

③ Rotate each screws clockwise.

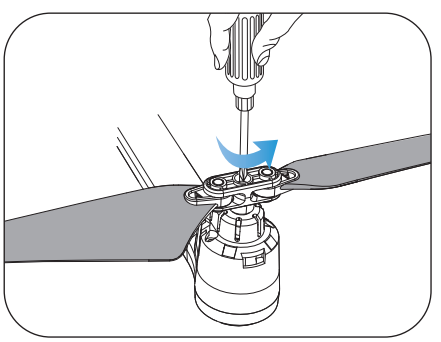

Removal: For propeller removal, use a screwdriver (provided) to rotate them counter-clockwise.

- The propeller is installed before the drone is packaged at the factory.
- The drone will not fly unless the correct propeller is installed on the correct motor shaft.

PREPARATION BEFORE FLIGHT

TF Card

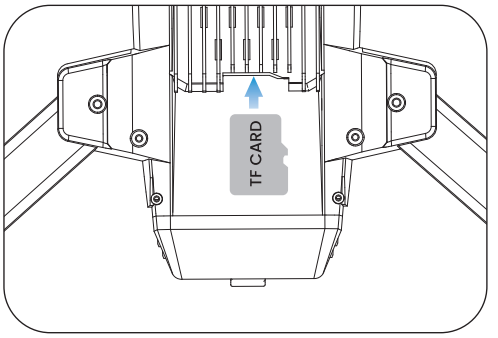

To store your photos and videos, insert the TF card (not included) into the slot as shown above before turning on the drone. The drone supports TF card up to 64GB .

Phone Holder

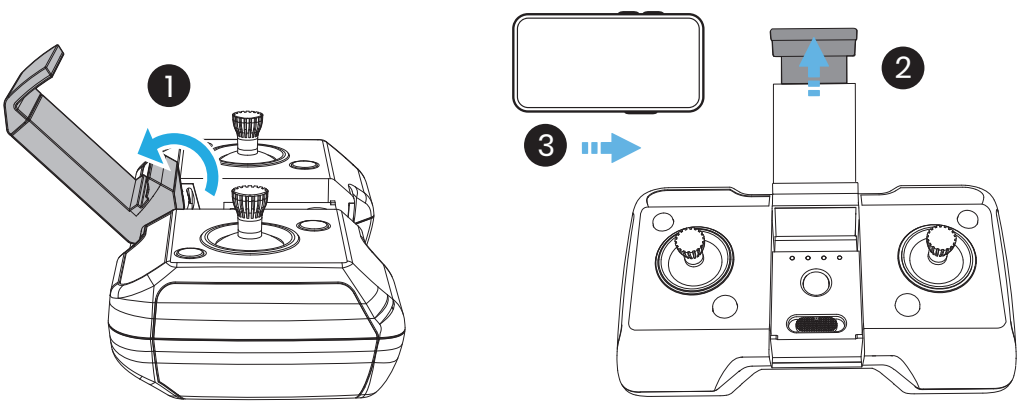

Expand the phone holder and place your mobile phone in it. Adjust the clamp to secure your mobile phone.

FLIGHT

Pairing

All of the following operations on this manual uses MODE 2.

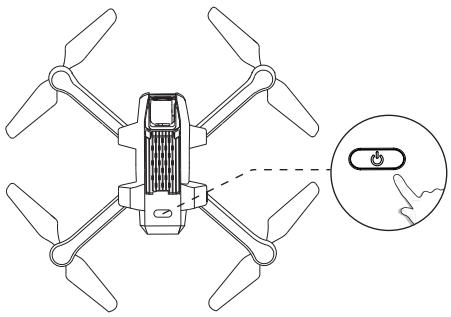

① Long press the power " ⏻ " button on the drone. The drone status LED begins to flash, which means the drone is powered on.

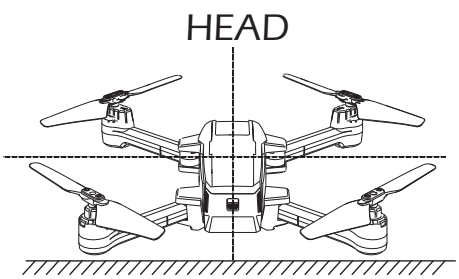

② Make sure the head of the drone is pointing forward, and it is placed on a level surface.

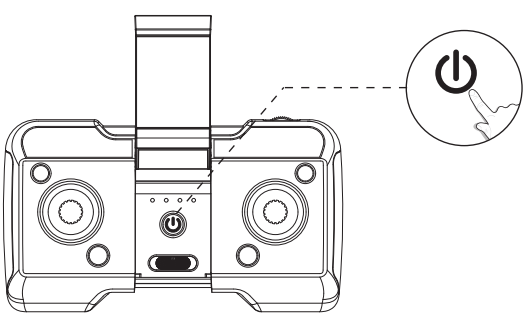

③ After both the drone and the transmitter are turned on, the transmitter will long beep once, indicating that the pairing is done.

FLIGHT

Connecting to Drone's Wi-Fi

Connect your phone to the Wi-Fi network generated by the drone. You can check the drone's status in the **HolyStone-FPV** app.

① Make sure to turn off Bluetooth, Mobile Data, and VPN. Enter your phone's Wi-Fi settings and click Wi-Fi to search for the Wi-Fi of the drone. (Make sure the pairing has finished before going to the Wi-Fi settings on your phone)

② Select the Wi-Fi network: HolyStoneGPS-******.

③ Wait for a couple of seconds for your phone to connect to the drone's Wi-Fi.

④ Open the **HolyStone-FPV** app.

> The connection between your phone and the drone is established automatically.

Because the Wi-Fi network created by the drone cannot access the Internet, your phone may inform you in various ways, like saying the connection isn't secure, or there is no internet connection, etc. Please ignore these messages. Or, in the case of getting Pop-ups, choose the option that allows you to stay with the current Wi-Fi.

Compass Calibration

The drone will perform a mandatory compass calibration before the initial flight. So you can skip step 1 if this is the first time you fly your drone.

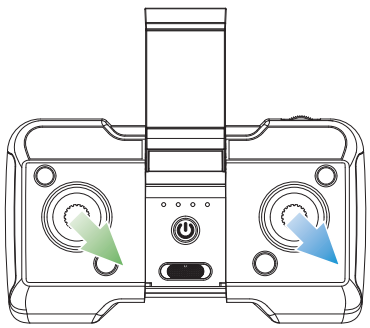

STEP 1: Push both the right and left joysticks simultaneously to the bottom right corner. The transmitter beeps twice. The drone status LED starts to flash yellow. You can proceed to step 2.

STEP 2: Keep the drone parallel to the floor, and spin it three times. Once the transmitter beeps once. You can proceed to step 3.

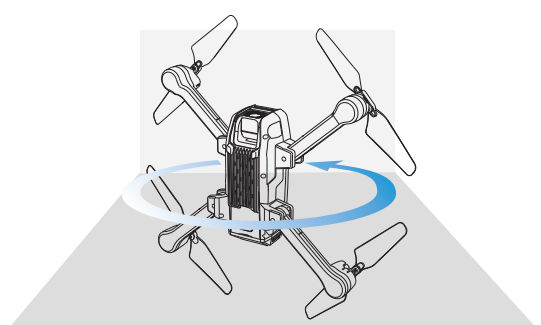

STEP 3: Point the head of the drone upward, and spin the drone three times. Once the transmitter long beeps which means that you have successfully performed a compass calibration.

GPS Signal Search

Please don't use the GPS mode when you are indoors.

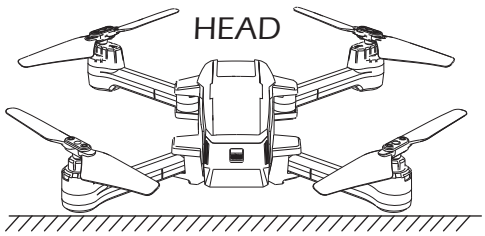

After calibrating the compass, put the drone on a flat surface. Make sure there are no external sources of signal interference around.

The drone will automatically perform a search for GPS signals. The search will last for about 1 minute.

The drone status LED will turn solid green once the search is finished.

When in GPS mode, the drone must first search for GPS signals before it can take off.

FLIGHT

Gyro Calibration

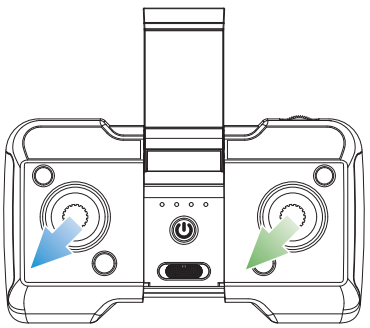

Push the two joysticks to the bottom left corner. The drone status LED will go from flashing to solid, which means that the gyro calibration is done.

To enusre flight safety, we recommend that the pilot performs a gyro calibration after every pairing or crash of the drone.

Unlocking the Motors

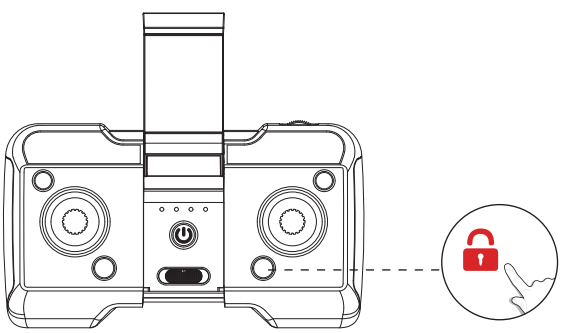

Short press the " 🔓 " button on the transmitter. The transmitter beeps once, and the motors begin to rotate. The drone is unlocked.

Short press the " 🔓 " button again, and the motors stop immediately. The drone is locked.

FLIGHT

Takeoff/Landing

⚠Please turn on the GPS mode before the flight to prevent the drone from flying away and getting lost!

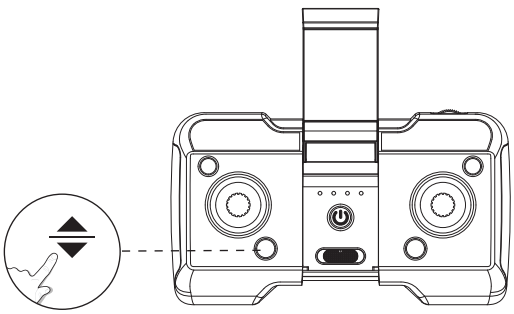

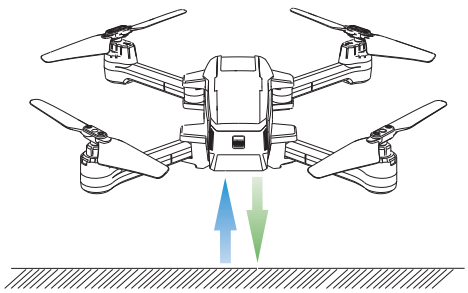

① **Takeoff:** After unlocking the motors, short press the " ⬍ " button. The drone will ascend to an altitude of 4 ft. You can now use the two joysticks to control the drone's movements in the air.

② **Landing:** During the flight, press the " ⬍ " button again. The drone slowly descends to the ground.

RETURN TO HOME

This function can only be activated when the drone is in GPS mode.

The RTH (Return to Home) function can bring the drone back to the last recorded Home Point. There are three kinds of RTH: Smart RTH, Failsafe RTH, and Low Voltage RTH.

Home Point: The drone will mark the first location where it receives a strong GPS signal (satellite connections ≥ 7) during the flight or takeoff as the Home Point.

Smart RTH

When the GPS signal is strong (satellite connections ≥ 7), press the " " button. The transmitter will beep once, indicating that the Smart RTH is activated. The drone will start flying back to the Home Point automatically.

During the RTH procedure, if the pilot pushes the left joystick up or presses the " " button again, the drone will exit the RTH procedure immediately.

Failsafe RTH

The Failsafe RTH will be activated when:

1. The drone receives a strong GPS signal (satellite connections ≥ 7); and
2. There is a pre-recorded Home Point; and
3. The connection between the transmitter and the drone is lost for more than 6 seconds.

Once the Failsafe RTH is activated, the drone will start to to fly back to the pre-recorded Home Point automatically.

If the connection between the drone and the transmitter is re-established during the Failsafe RTH procedure, the drone will stop flying back to the Home Point, and the pilot will regain control of the drone.

RETURN TO HOME

Low Voltage RTH

* RA: the Return Altitude set in the app setting.

① The First Stage of Low Voltage RTH: The drone status LED starts to flash red slowly and the transmitter keeps beeping. The drone enters the first stage of Low Voltage RTH. There are two possible returning procedures: (After the activation of the first stage of Low Voltage RTH, a "safety zone" with a height of 98 ft and a radius of 164 ft will be generated with the Home Point as its center. Once the drone returns to the airspace above the Home Point (thus ending the RTH procedure), it can only fly within the safety zone.)

a. If the flight altitude is higher than RA and the flight distance is larger than 16ft, the drone will first fly back above the Home Point, descend to 49ft and hover there. The first stage of Low Voltage RTH ends.

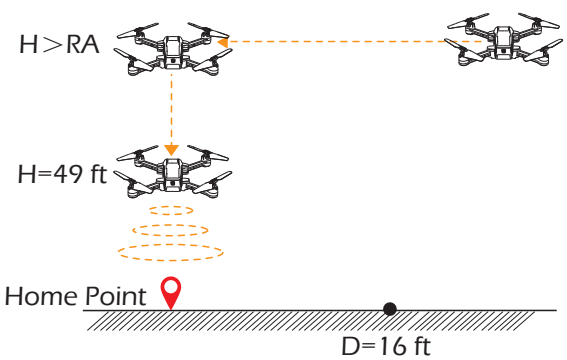

a. Flight altitude > RA
Flight distance > 16ft

b. If the flight altitude is lower than RA and the flight distance is larger than 16ft, the drone will first ascend to RA, then fly back above the Home Point and hover there. The first stage of Low Voltage RTH ends.

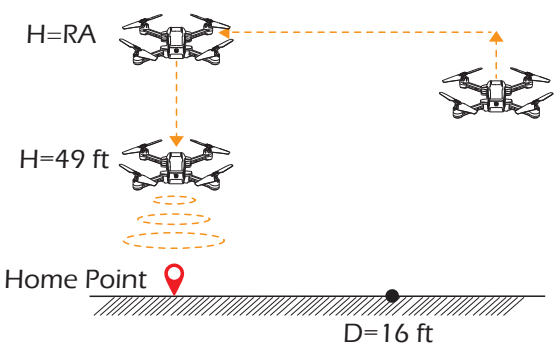

b. Flight altitude < RA
Flight distance > 16ft

RETURN TO HOME

②The Second Stage of Low Voltage RTH: When the drone status LED starts to flash red quickly, and the transmitter keeps beeping, the drone will enter the second stage of Low Voltage RTH. There are two possible returning procedures:

a. If the flight altitude of the drone is higher than or equal to 49 ft, the drone will, while maintaining its current altitude, first fly back and hover above the home point. It then slowly descends to the ground.

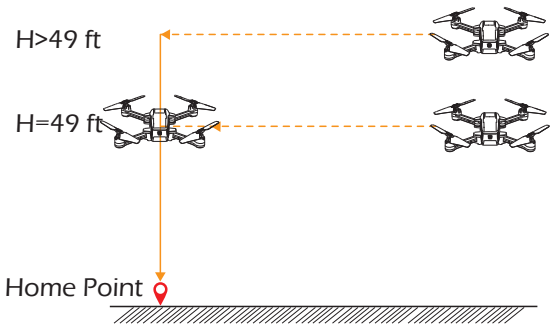

a. Flight altitude ≥ 49 ft

b. If the flight altitude of the drone is lower than 49 ft, the drone will first ascend to 49 ft, fly back above the home point, then slowly descend to the ground.

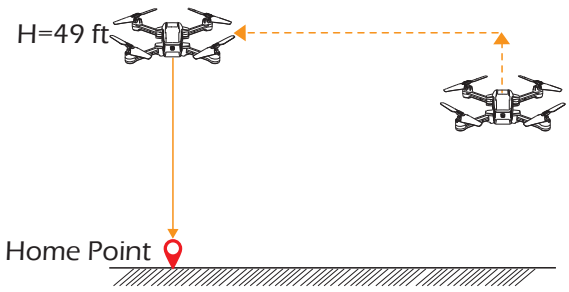

b. Flight altitude < 49 ft

⚠ - During Low Voltage RTH, the pilot cannot terminate the procedure.

- During RTH, the drone cannot avoid obstacles.
- If the GPS signal is weak or unavailabe, the RTH cannot be activated.
- If the drone receives not GPS signal, and the connection between the drone and the transmitter is lost for more than 6 seconds, the RTH cannot be activated. The drone will just descend to the ground and locks its motors.

TRIMMER

You can only use this function when the drone is NOT in GPS mode. There is no need to trim when the drone is in GPS mode.

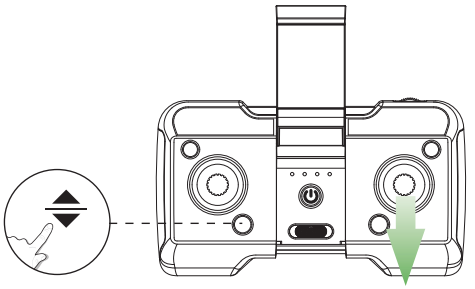

The Forward Trim

If the drone tends to drift forward:

1. Press down the " ⬍ " button and do not release it.
2. At the same time, push the right joystick backward one time.
3. Depending on how the drone drifts, it may take several pushes to balance the drone.
4. After each push, wait 2 seconds to watch the drone's movement. If it still drifts, push the joystick backward again.
5. Repeat STEP 4 until the drone drifts forward no more.

* You can also fix the Backward/Sideward Trim using a similar method, i.e., pushing the right joystick to the direction opposite the drift.

AITITUDE HOLD FUNCTION

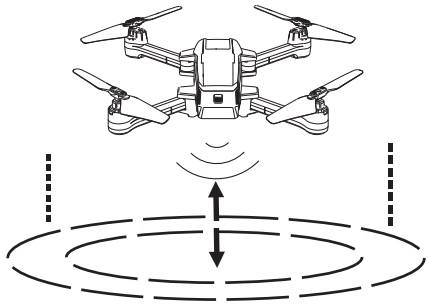

The drone is designed with an altitude-hold function so the drone can maintain its altitude after you release the left joystick. (The left joystick will automatically spring back to the middle)

APP OPERATION INSTRUCTION

The Interface

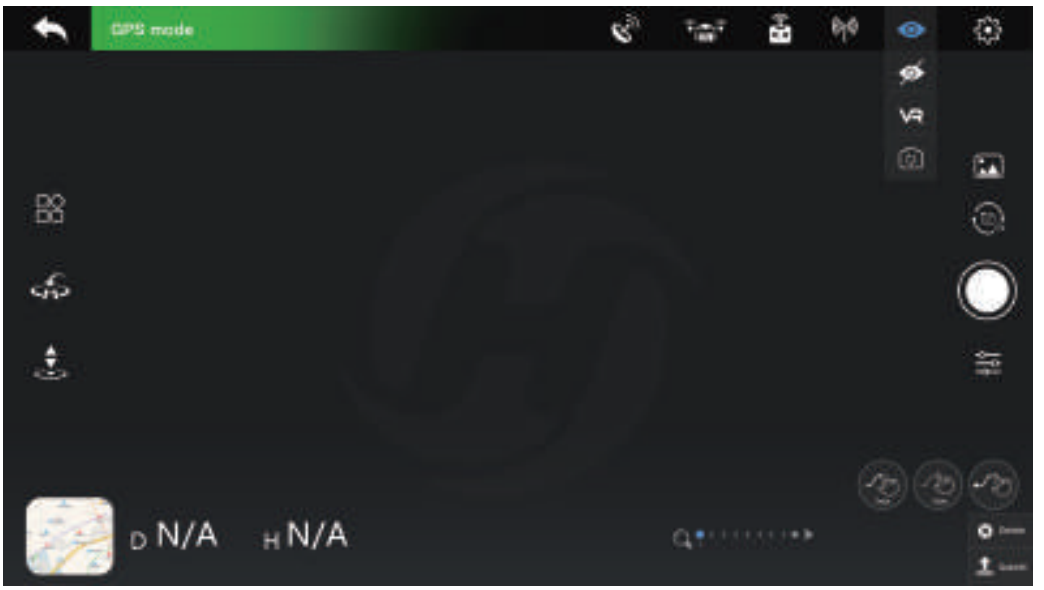

	Return: Tap to return to the home screen.	
GPS mode	System Status: Displays the current flying status of the drone and warnings.	
	Signal Strength (GPS): Display the strength of the GPS signal.	
	Battery Level (drone): Realtime display of the current battery level of the drone.	
	Transmitter Signal: Displays the signal strength of the transmitter.	
	WiFi Signal: Display of the signal strength between the cellphone and the drone.	
		Hide: Tap to hide all the icons.
	VR	VR Split Screen: Tap to turn on the VR mode. Then put your cellphone into a VR headset (not included) to view the live-feed in 3D.
		Screen Rotation: Tap to turn the cellphone's screen upside down.

APP OPERATION INSTRUCTION

	Flight Setting: Tap to enter the setting interface. Alter settings for flight height/distance, etc.
	Multifunction: Tap to choose from various flight functions.
	Return to Home: Tap to activate the RTH function. The drone will fly automatically back to the Home Point.
	Take off/Land: Tap once, the drone will take off to a height of 4 ft. Tap again, the drone will slowly descend to the ground.
	Gallery: Tap to view the photos and videos taken by the drone camera.
	Photo/Video: Tap to switch between photo taking and video recording.
/	Shutter: Tap to take a picture or start or stop recording a video.
	Camera Settings: Tap to enter camera settings. You can choose between 2.5K and 4K resolutions.
	Tapfly 1: The drone flies along the path you draw on the screen. (Please first tap on the map to enlarge it, then set the path.)
	Tapfly 2: The drone flies along the path generated by connecting the points you tap on the screen in order.(Please first tap on the map to enlarge it, then set the path.)
Delete	Delete: Tap to cancel the chosen function.
Submit	Submit: Tap to submit the chosen function.
	View: Tap to switch between the map view and camera view.
D N/A	Flight Distance: Drone's horizontal distance from the Home Point.
H N/A	Flight Altitude: Drone's vertical distance from the Home Point.
	Zoom In/Out: Slide to zoom in and out.

APP OPERATION INSTRUCTION

Beginner Mode

The beginner mode is the default operating mode.When in beginner mode:

1. Default orbit flight radius: 16 ft.
2. The flight distance is limited to: 0~98 ft.
3. The flight height is limted to: 0~98 ft.
4. Default return altitude: 49 ft.

Flight Settings
On APP

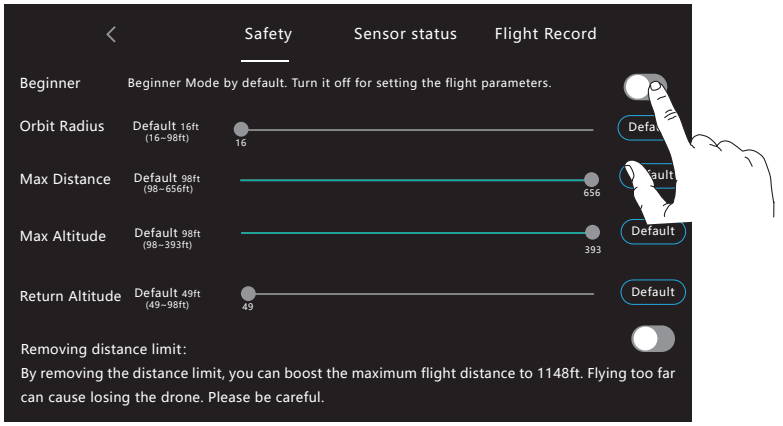

If you want to alter the above-mentioned parameters, please first turn off the beginner mode. You can go to the "Settings" page to modify these parameters.

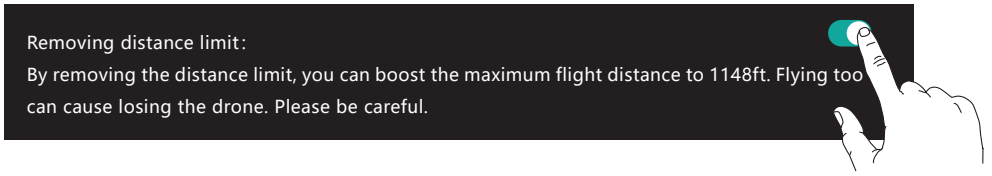

If you want to get a longer flight distance, you can activate the "Remove Distance Limit" function in the "Settings" and boost the max flight distance up to 1148 ft.

⚠ Please be cautious when removing the distance limit. If the battery of the drone is low, the drone may not be able to fly back to the Home Point!

Follow Me

When the Follow Me function is enabled, the drone will track your movement by following the GPS signal on your mobile phone. (Before using this function, please make sure that the connection between the drone and the transmitter is strong and stable.)

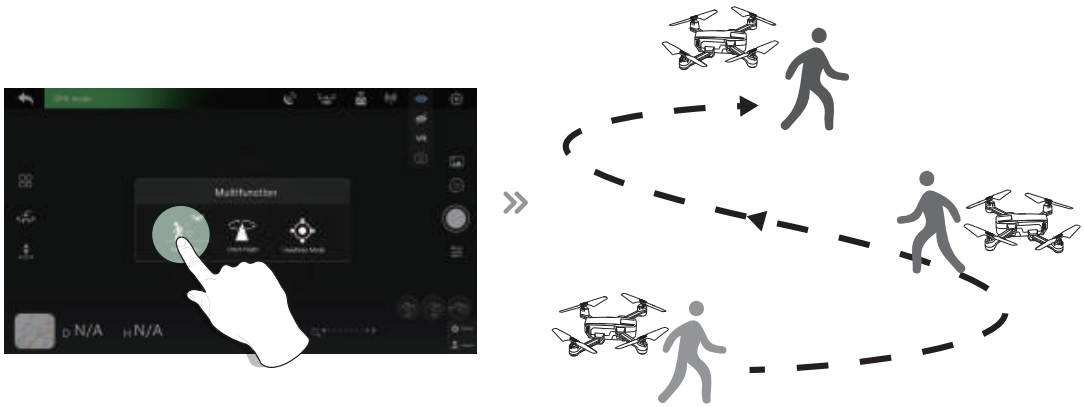

1. Ensure the drone's flight range is within 16~98 ft.
2. Tap the " " icon first, then select the " " icon, and follow the instructions in the prompt box to enter the Follow Me function — the drone will now follow the mobile phone's coordinates.
3. To exit Follow Me Mode, simply tap the " " icon on the app interface again.

· The Follow me function can only be used if the flight range is within 16~98 ft.

· The Follow me function may be difficult to activate if the mobile phone's GPS signal is too weak. This could be caused by signal interference from surrounding buildings, trees, mobile network congestion, etc.

· Please use Follow Me function in an open area and be mindful of your surroundings. The drone is NOT equipped with obstacle avoidance.

Orbit Flight

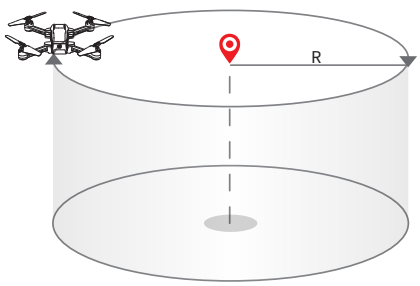

1.Tap the " " icon first. Then tap the " " icon. Follow the instructions in the prompt box to activate the Orbit Flight function.

2.The drone will record its current position when this function is activated as the circle's center. It then flies away from it to the set radius distance and begins to circle clockwise. (Default radius:15 ft)

3.Tap the " " icon again to turn off Orbit Flight.

APP OPERATION INSTRUCTION

Headless Mode

The Headless Mode is a great training tool for beginner pilots. It is also useful when the drone is too far from the pilot (which makes it difficult to tell its orientation). It keeps the drone traveling forward, backward, left, or right when you move the right joystick in those directions, regardless of which way the front of the drone is pointed.

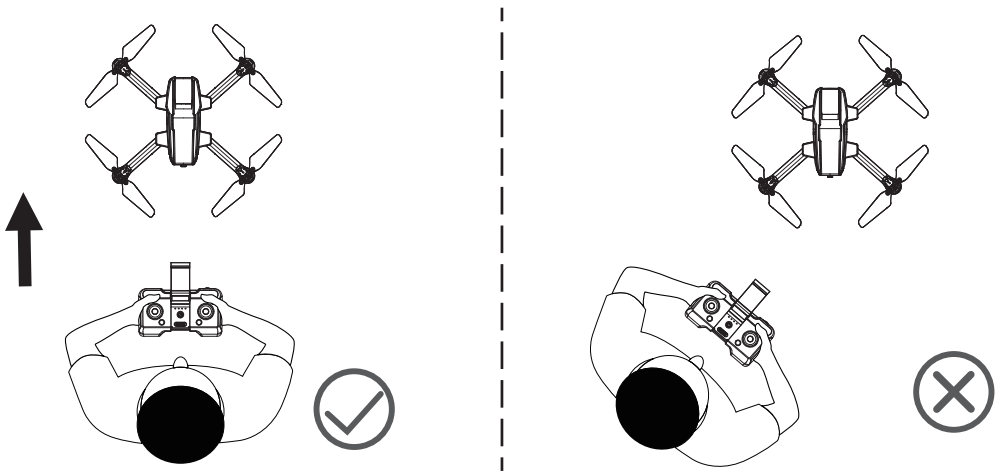

The pilot should stay facing the same direction that the drone's head points to when it takes off.

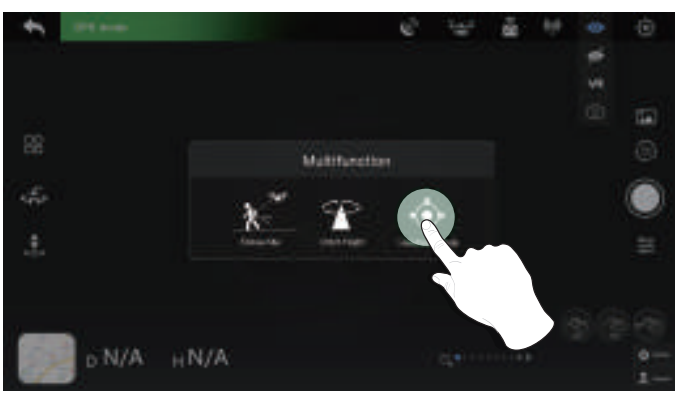

1. First tap the " " icon on the app interface, then select " " icon by tapping on it. Follow the instructions in the prompt box to activate Headless Mode.

2. Tap the " " icon again. The drone exits Headless Mode.

APP OPERATION INSTRUCTION

* Why is the orientation of the drone important?

In normal flying mode, the control of the drone movement can sometimes be counter-intuitive for beginners. For instance, when the drone is in the air with its head pointing to your right, if you push the right joystick forward, the drone will fly to your right, instead of flying forward.

With the headless mode, the drone has a fixed "head." In Headless Mode, the drone always remembers the side its head points to during takeoff as the front side. This means that if the drone takes off with its head pointing forward, it doesn't matter how the drone is oriented in the air, when you push the right joystick forward, the drone will fly forward. Or, when its head is pointing to you, if you push the right joystick to the left, the drone will fly to your left.

Photo/Video

① Tap the " " icon to take a photo.

② Tap the " " icon to start a recording. Tap again to stop recording.

③ Tap the " " icon to view the photos and video in the app's gallery.

④ If a TF card is inserted into the drone previously, the photos and the videos will be saved to the app album, the cellphone album and the TF card.

⑤ If no TF card is inserted, the photos and the videos will be saved to the app album and the cellphone album. To view them through the app, you need to first connect the mobile phone to the Wi-Fi network generated by the drone.

APP OPERATION INSTRUCTION

TapFly

* We strongly recommend that you maximize the map before drawing the flight path.

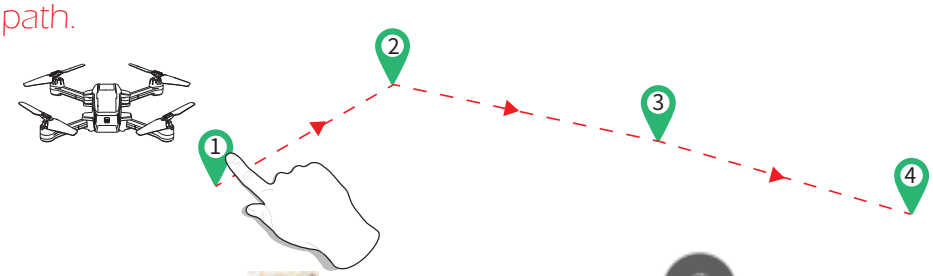

1. Tap on the Map" " first, then tap the " " icon. Follow the instructions in the prompt box to enter the TapFly function.

Tapfly 1: Tap the " " icon on the app interface. Draw a line on the screen to create a flight path, and tap " Submit " icon to submit the path. The drone will then fly along this path.

Tapfly 2: Tap the " " icon on the app interface, then tap a few points on the screen. Tap the " Submit " icon to submit the path. The drone will then fly along the path created by connecting the points you tap in order.

2. Exit the TapFly function by tapping the " " icon again.

3. If the flight path submission fails, you can submit it again, or exit the function.

⚠ DO NOT fly the drone towards people, animals, small/thin objects (e.g. tree branches and power lines) or transparent objects (e.g. glass or water).

· To download the map:

① Disconnect your mobile phone from the drone's Wi-Fi network.

② Connect your mobile phone to the internet. Then go back to the app and tap on the map icon. The map will load automatically. Wait till the loading is finished.

③ Reconnect your mobile phone to the drone's Wi-Fi network and come back to this function.

· The expected and actual flight paths may not fit perfectly.

SPECIFICATIONS

DRONE

Model: HS440D

Weight: 195g/6.8oz

Max Flight Time: 19 minutes (in a windless environment)

Operating Temperature Range: 32° to 104°F

Size: 291× 207 × 60 mm (Unfolded)

123× 93 × 60 mm (Folded)

DRONE BATTERY

Capacity: 1100 mAh

Voltage: 7.6 V

Battery Type: Lithium-ion Polymer Battery

Energy: 8.36 Wh

Charging Temperature Range: 41° to 104°F

Charging Time: about 120 minutes

TRANSMITTER

Operating Frequency: 2452-2474 MHz

Max Flight Distance: 1148 ft/350 m (outdoor and unobstructed)

Battery Type: 3 x 1.5V AAA

Operating Temperature Range: 32° to 104°F

SPECIFICATIONS

CAMERA

Operating Frequency: 5500-5700MHz

Photo Resolution: 4K:3840×2160P

2.5K:2560×1440P

Video Resolution: 4K:3840×2160P@15fps (in TF card)

1920×1080P@25fps (in mobile phone)

2.5K:2560×1440P@25fps (in TF card)

1920×1080P@25fps (in mobile phone)

Lens: FOV 120°

Max Transmission Distance: 656 ft/200 m

(outdoor and unobstructed)

Photo Formats: JPEG

Video Formats: MP4

Supported TF Cards: Supports a TF Card (Class10 above) with capacity of up to 64 GB (Not included)

File Systems: FAT32

USB CHARGING CABLE

Input: 5V/2A

Rated Power: ≤10W

CONTACT US

Please do not hesitate to contact us if you need further support.

☎ +1(833)766-4733

www.holystone.com

usa@holystone.com (USA)
ca@holystone.com (CA)
eu@holystone.com (EU)
au@holystone.com(AU)

GENERAL INFORMATION

FCC Notice:

This device complies with part 15 of the FCC Rules. Operation is subject to the following two conditions:

(1) This device may not cause harmful interference, and

(2) This device must accept any interference received, including interference that may cause undesired operation.

The Supplier's Declaration of Conformity is available at the following address:

https://www.holystone.com/Download/US/HS440D_FCC_sDoC.pdf

NOTE: This equipment has been tested and found to comply with the limits for a Class B digital device, pursuant to part 15 of the FCC Rules. These limits are designed to provide reasonable protection against harmful interference in a residential installation. This equipment generates, uses and can radiate radio frequency energy and, if not installed and used in accordance with the instructions, may cause harmful interference to radio communications. However, there is no guarantee that interference will not occur in a particular installation. If this equipment does cause harmful interference to radio or television reception, which can be determined by turning the equipment off and on, the user is encouraged to try to correct the interference by one or more of the following measures:

— Reorient or relocate the receiving antenna.

— Increase the separation between the equipment and receiver.

— Connect the equipment into an outlet on a circuit different from that to which the receiver is connected.

— Consult the dealer or an experienced radio/TV technician for help.

GENERAL INFORMATION

WARNING: Changes or modifications not expressly approved by the party responsible for compliance could void the user's authority to operate the equipment.

RF Exposure
The equipment complies with FCC radiation exposure limits set forth for an uncontrolled environment. This device should be installed and operated with minimum distance 20cm between the radiator & your body. This part belongs to the drone.

RF warning for Portable device: The device has been evaluated to meet general RF exposure requirement. The device can be used in portable exposure condition without restriction. This part belongs to the transmitter.

IC Notice:
This device is restricted to indoor use when operating in the 5150 to 5250 MHz frequency range.

This device complies with Industry Canada license-exempt RSS standard(s). Operation is subject to the following two conditions:
(1) this device may not cause interference, and
(2) this device must accept any interference, including interference that may cause undesired operation of the device.

CAN ICES-003 (B)
Avis d'Industrie Canada
Le présent appareil est conforme aux CNR d'Industrie Canada applicables aux appareils radio exempts de licence. L'exploitation est autorisée aux deux conditions suivantes :
(1) l'appareil ne doit pas produire de brouillage, et

(2) l'utilisateur de l'appareil doit accepter tout brouillage radioélectrique subi, même si le brouillage est susceptible d'en compromettre le fonctionnement.

CAN NMB-003 (B)
RF Exposure
Radiation Exposure Statement:
The device is compliance with RF exposure guidelines, users can obtain Canadian information on RF exposure and compliance. The minimum distance from body to use the device is 20cm.

Le présent appareil est conforme
Après examen de ce matériel aux conformité ou aux limites d'intensité de champ RF, les utilisateurs peuvent sur l'exposition aux radiofréquences et compliance d'acquérir les informations correspondantes. La distance minimale du corps à utiliser le dispositif est de 20cm.

HOW TO RECYCLE THIS PRODUCT

This symbol on the product or its documentation indicates that it must not be disposed of with household waste.
Uncontrolled waste disposal may harm the environment or human health.
Please separate your device from other types of waste to recycle it responsibly.
This will help to foster the sustainable re-use of material resources.
We invite you to contact your retailer or inquire at your local town hall to find out where and how the drone can be recycled.

GENERAL INFORMATION

BATTERY WARNING:

1. Failure to follow all the instructions may result in serious injury, irreparable damage to the battery and may cause a fire, smoke or explosion.
2. Always check the battery's condition before charging or using it.
3. Replace the battery if it has been dropped, or in case of odor, overheating, discoloration, deformation or leakage.
4. Never use anything other than the approval Li-Po charger to the battery. Always use a balancing charger for Li-Po cells or a Li-Po cell balancer. It is recommended that you do not to use any other charger than the one provided with the product.
5. The battery temperature must never exceed 60°C (140°F) otherwise the battery could be damaged or ignite.
6. Never charge battery on a flammable surface, near flammable products or inside a vehicle (preferably place the battery in a non-flammable and nonconductive container).
7. Never leave the battery unattended during the charging process. Never disassemble or modify the housing's wiring, or puncture the cells. Always ensure that the charger output voltage corresponds to the voltage of the battery. Do not short circuit the batteries.
8. Never expose the LiPo battery to moisture or direct sunlight, or store it in a place where temperatures could exceed 60°C(car in the sun, for example).
9. Always keep it out of reach of children.
10. Improper battery use may result in a fire, explosion or other hazard.

GENERAL INFORMATION

11. Non-rechargeable batteries are not to be recharged. Rechargeable batteries are only to be charged under adult supervision.
12. Different types of batteries or new and used batteries are not to be mixed.
13. Batteries are to be inserted with the correct polarity.
14. The supply terminals are not to be short-circuited. Regular examination of transformer or battery charger for any damage to their cord, plug, enclosure and other parts and they must not be used until the damage has been repaired.
15.The packaging has to be kept since it contains important information.
16.This toy should only be connected to the equipment with symbol Class II.

EU RF Power (EIRP): <14 dBm (2452MHz ~ 2474MHz)

Caution
1. The max operating of the EUT is 45°C. and shouldn't be lower than -10°C.
2. The device complies with RF specifications when the device used at 0mm from your body.
3. Declaration of Conformity.

We, Xiamen Huoshiquan Import & Export CO., LTD
hereby, declare that the essential requirements compliance with the Directive 2014/53/EU, the RoHS Directive 2011/65/EU and Safety Directive 2009/48/EC have been fully fulfilled on our product with indication below:
Product Name: REMOTE CONTROL MODEL/RADIO CONTROLLED
Model/Mark: HS440D/HOLYSTONE

GENERAL INFORMATION

The Statement of compliance is available at the following address:
http://www.holystone.com/Download/CE/HS440D_EU_DOC.pdf
This product can be used across EU member states.

MANUFACTURER INFORMATION

Manufactured by
Xiamen Huoshiquan Import & Export CO.,LTD
Address: Unit 1, Room 501, Hongxiang Building, No.258 Hubin Nan Road, Siming District, Xiamen, China
+1(833)766-4733

MADE IN CHINA(CN)